A Proven Transmission Line Loudspeaker

by B.J. WEBB

IT IS AN UNFORTUNATE FACT of audio life that all loudspeaker drive units require isolation or delay of the radiations from the rear of the diaphragm in order to prevent cancellation of those from the front of it. In the case of tweeters, with their small diaphragms and short wavelengths, this can readily be accomplished by total enclosure of the rear within the unit itself, during manufacture, producing pressure loaded or closed back types; but this technique cannot be applied successfully to bass and mid-range drivers.

The various methods of loading the cones of such units to achieve the same objective are well known: horns, baffles and boxes of widely differing sizes and shapes presenting the units with different degrees and kinds of loading. All have their advantages and disadvantages. I have tried them all over the years, and have eventually reached the conclusion that, on balance, the transmission line has most to commend it, chiefly on the ground of extended non-resonant bass response. Its drawbacks include some complication of the internal structure of the enclosure, somewhat increased cost, consequentially, and relatively low efficiency because, as in the case of the I.B. or total enclosure, the rear radiation is simply "thrown away," not used.

A transmission line is simply a long open-ended duct or tube, folded to conserve space--a labyrinth--filled with sound absorbing material, into which the rear of the loudspeaker unit "looks." The object of this construction is to absorb the rear radiation completely, and hence the "line" or tube should be of infinite length, which is impossible. However, it is possible and perfectly practical to terminate a transmission line at a chosen length, preferably one quarter wavelength of the free air resonance of the driver, but, where this is inconveniently long, then one quarter wavelength of a selected low frequency between this resonant frequency of 40Hz. In the case of the design to be described, the

Contributing Editor Reg Williamson, at right, pokes the midrange driver of one of his Webb designed speakers. After a bit of listening, Reg asked Webb to do a bit of re-design of his pair. The article, which incorporates the changes, resulted when the Editor heard the pair in the Williamsons' Norwich, England home and asked if Webb could be persuaded to write about his creation. He could be, and did.

REPRINTED by BADGER SOUND SERVICES LTD with the permission and assistance of THE AUDIO AMATEUR MAGAZINE, PO BOX 176, PETERBOROUGH, NEW HAMPSHIRE 03458, USA, where it was first published in issue 1/75. Copyright reserved by THE AUDIO AMATEUR.

fundamental resonance of the system, using the specified bass driver, is just below 40Hz and the tube length is approximately 7'6" measured along the center line.

Loudspeakers are highly personal. Certain characteristics of high quality models everyone will accept, or even demand, as essential, although these will not be accorded equal degrees of importance by different listeners: e.g., ability to reproduce at realistic levels with low distortion in any domestic environment; good "attack" with minimal "overhang," i.e. good transient response; wide h.f. dispersion; smooth response characteristic; integration of sound from different drive units; low coloration. To these qualities must be added what the designer considers the right balance of sound, and it is in this respect and in that of coloration that the most obvious audible differences among speakers are to be found.

The loudspeaker described in this article evolved slowly. Its design involved the examination and testing of a large number of drive units from different sources separately and in combination, and a seemingly endless series of variations of components in the integrating network, as well as in details of the line itself and in the damping. It has achieved a high degree of acceptability among critical listeners over a period of time.

In order to forestall possible inquiries, and to make my position perfectly clear, I must state at once and without equivocation that:
(a) It is perfectly possible to use this cabinet design with other combinations of units, but the sound will then be quite different, and, if results are to be of equivalent quality, a re-design of the integrating network will be necessary, however good and well matched the individual units may be. It is also necessary that any alternative bass driver shall have a fundamental resonance at approximately the same frequency as the B.139, typically 23Hz with a cone or diaphragm of manometric area within the range 50 to 66 sq.in.
(b) The considerations mentioned in (a) above apart, I cannot undertake to offer advice on the choice or use of alternative drive units or on alterations to the integrating network, and experiments of this nature, which may work very well or very badly, should be undertaken, if at all, only in the light of this statement.

I chose the KEF units for their low inherent coloration and because of their availability in sets of bass, mid-range and h.f. units of matching efficiency. That coloration shows up most clearly and uncomfortably in the middle range, but the B.110, because of its carefully treated cone and freedom of movement on its roll surround, used well within its stated working frequency range in a non-resonant enclosure, provides very clean response.

The use of a second h.f. unit or "super tweeter" may be queried, since the response of the T.27 extends without appreciable fallaway to above 30kHz. The "super tweeter" does not in fact extend the range of the speaker at all, but it does bring advantages in that: the response of these two units working

FIG. 1

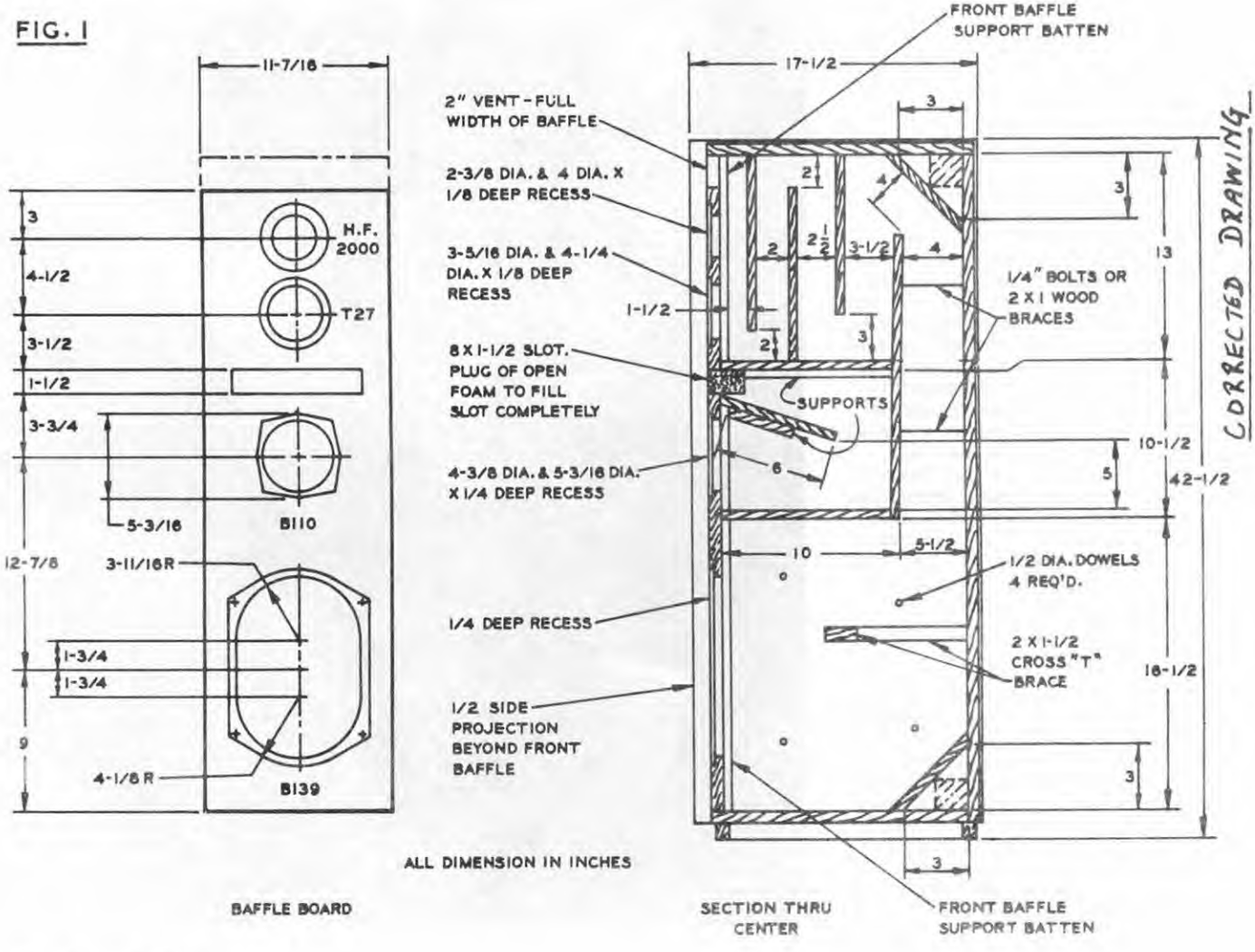

FIG. I

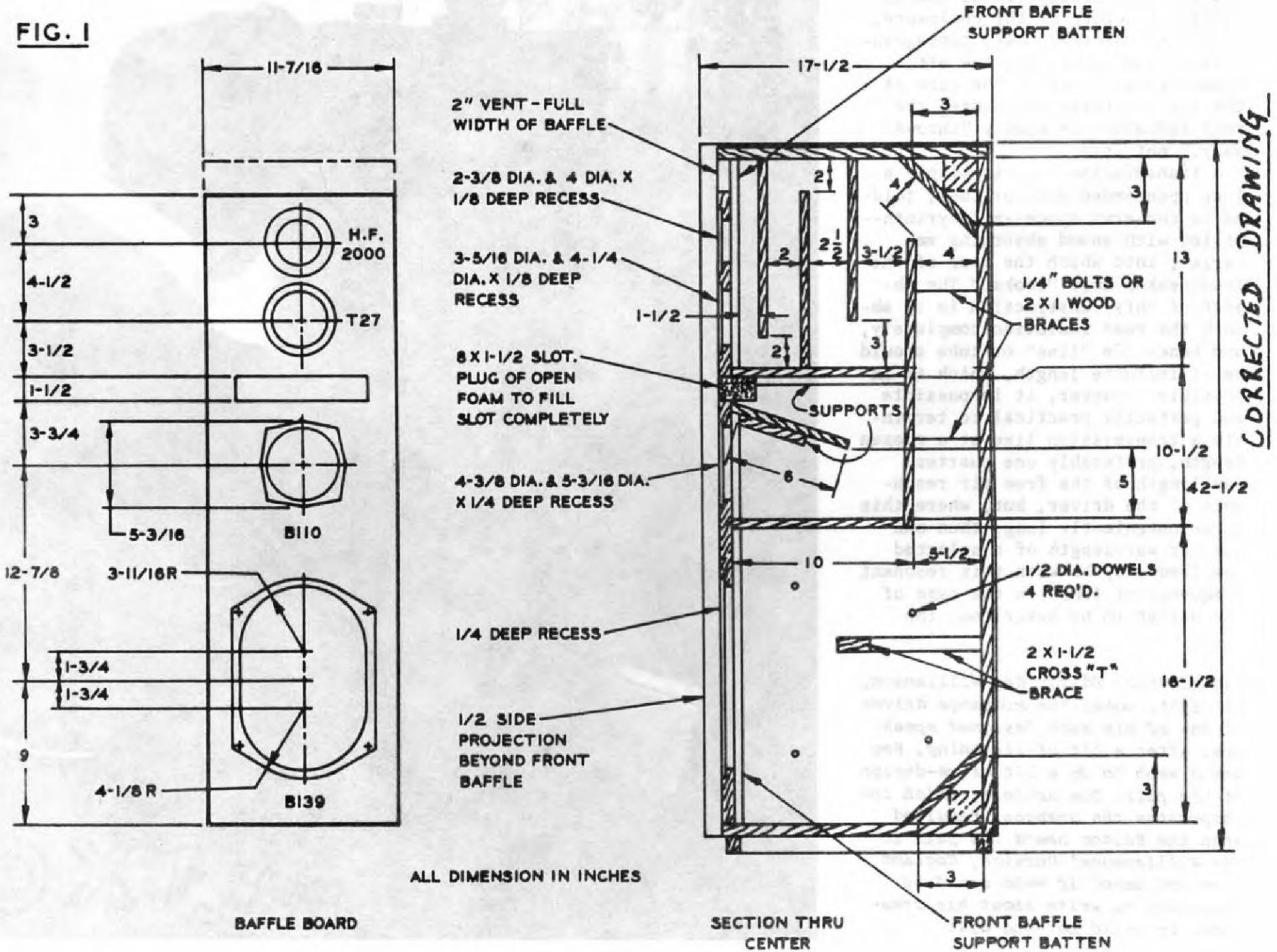
11-7/16
3
4-1/2
3-1/2
1-1/2
3-3/4
5-3/16
12-7/8
1-3/4
1-3/4
9
H.F. 2000
T27
B110
3-11/16R
4-1/8 R
B139
BAFFLE BOARD
FRONT BAFFLE SUPPORT BATTEN
17-1/2
2" VENT - FULL WIDTH OF BAFFLE
2-3/8 DIA. & 4 DIA. X 1/8 DEEP RECESS
3-5/16 DIA. & 4-1/4 DIA. X 1/8 DEEP RECESS
1-1/2
8 X 1-1/2 SLOT. PLUG OF OPEN FOAM TO FILL SLOT COMPLETELY
4-3/8 DIA. & 5-3/16 DIA. X 1/4 DEEP RECESS
1/4 DEEP RECESS
1/2 SIDE PROJECTION BEYOND FRONT BAFFLE
SUPPORTS
1/4" BOLTS OR 2 X 1 WOOD BRACES
1/2 DIA. DOWELS 4 REQ'D.
2 X 1-1/2 CROSS "T" BRACE
13
10-1/2
42-1/2
16-1/2
10
5-1/2
CORRECTED DRAWING
ALL DIMENSION IN INCHES
SECTION THRU CENTER
FRONT BAFFLE SUPPORT BATTEN

together above 10kHz is rather smoother than that of the T.27 alone; placing h.f. units one above the other helps frequency coverage in the horizontal plane; and power handling capacity is improved. Spacing between h.f. units is critical, as phase cancellation can occur, but the frequency response curve (Fig.5, a & b) indicates good balance and the polar diagram (Fig. 3) shows wide-angle dispersion at 10kHz.

The full depth of the cabinet is utilized immediately behind the B.139 bass driver, to minimize reflections. This leads into the start of the labyrinth, which, at this point, has a cross-sectional area of 66 sq.in., equal to the cone area of the driver. This cross sectional area is progressively reduced along the length of the pipe, which is perfectly permissible as rear radiation is increasingly absorbed throughout the length of the line.

The dividing baffles brace the cabinet sides, breaking up resonant areas and stiffening them, and this is the function of the "T" brace in the bass chamber, which should not be less than 2" x 1½" timber, and may be 2" x 2". The four ½" dowel rods shown have a similar function in breaking up a relatively large panel section into smaller areas, increasing rigidity and also providing support for the damping material.

Materials and Construction

Chipboard is available in different grades and at varying prices. Don't be tempted to "spoil the ship for a ha'porth of tar." It is essential to use high density board, which is the most expensive and the most difficult to cut, unfortunately. It is supplied in sheets of standard size, 8 ft. x 4 ft. All the exterior panels for a pair of these speakers can be cut from 1½ sheets, and the internal ones from an additional half sheet of 12mm. (½") thickness instead of the 18mm. (3/4") thickness used for the bodies. The use of this thinner material for the internal panels saves both cost and space.

The constructor, if he has the space and facilities to handle these large, heavy and cumbersome pieces of material, may buy the sheets as they stand, mark them up and cut them himself at some saving in cost, but I would not recommend this procedure to anyone who does not possess a circular saw equipped with a special blade designed for cutting resin-bonded materials, a suitable bench and a competent friend able and willing to help. It is quite definitely not a single-handed job. It is essential to work out and draw a careful cutting plan before work is started.

A less troublesome alternative is to get the board cut at the timber merchant or Do-It-Yourself shop where you buy it. Most of these establishments provide such a service, and the extra cost for cutting is not enormous and certainly represents good value for money. A clear and unequivocal statement of what is wanted is essential; again, a cutting plan will help and it is necessary to emphasize that all the pieces must be cut with absolutely straight sides and true right angles at the corners. The basic cutouts in the front baffle can be done at the same time, but the necessary recessing will probably have to be done by the constructor, by hand.

FIG. 2

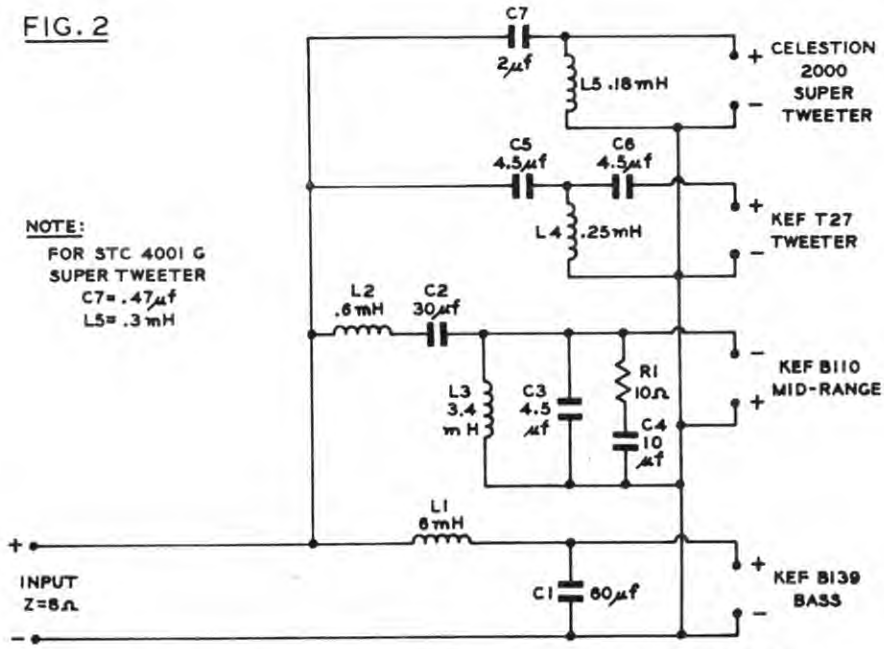

The special crossover network for the speaker is to be offered in a kit form with a special etched circuit board and using non polarized capacitors with special precision wound ferrite cored coils. These, along with wool and grille material may be obtained directly from Falcon Electronics, 26 Station Road, Bexhill-on-Sea, Sussex, TN40 1RG, England. Price each for the crossover is estimated to be about $15. plus delivery. If there is sufficient interest, Old Colony Sound will arrange to handle group orders. Send postcard to Box 21, Swarthmore, PA 19081 for details.

CONNECTIONS

B & G	to DN	(NEG or GND)
A		INPUT +
C		L.F. (B.139)

CONNECTIONS

B & C	Negative or Ground
A	Input +
C	L.F. (B.139)
D	M.R. (B.110)
E	H.F. Low (or H.F.2) = T.27
F	H.F. High (or H.F.1) = 2000/STC

Note: Connection of B110 Midrange unit in REVERSE PHASE is correct.

FIG. 4

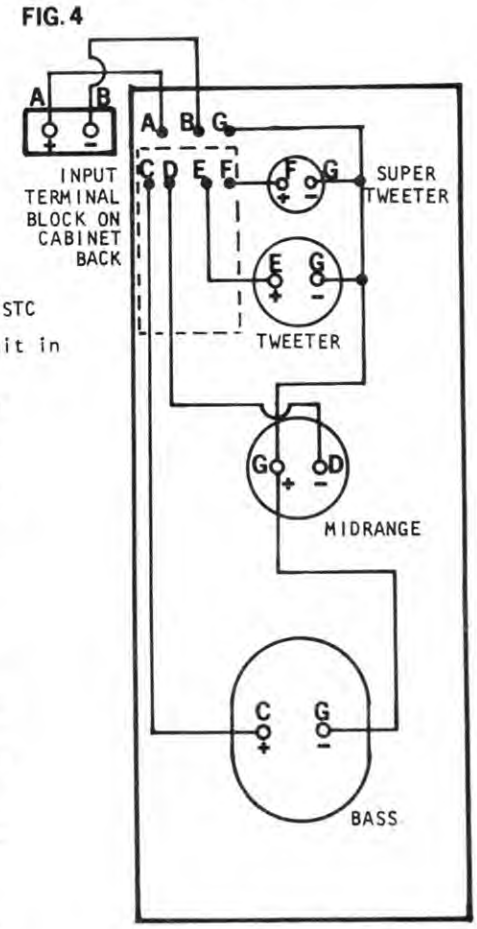

FRONT PANEL: REAR VIEW

The construction of these cabinets is somewhat complex. Several prototypes were made, and modified, by hand, but the design was not evolved for home building, and the project should *not* be undertaken by anyone without skill and experience in woodworking. Therefore, no detailed assembly instructions are provided in this article. In my experience, each worker adopts his own approach, which will vary in accordance with his own ideas and the way in which he intends to finish the enclosures.

For example, if you intend to apply Formica or some similar material to the exterior, or to finish the cabinets by painting or spraying, the internal baffles may be held in place by glueing and then screwing through from the outside, with the heads of the screws countersunk just below the surface and the shallow depressions filled flush. On the other hand, if you use veneered chipboard, the internal partitions must be held by glue and blocks (not more than 1" square section) fitted on the inside (see Fig.1).

Another question which arises when veneered board is used is that of edges, which are not veneered and will inevitably show. Perhaps the simplest solution is to make the cabinet back and sides 18mm. longer (taller) and sink the top flush with them. A sheet of Formica can then be used to cover the whole top, with matching or contrasting Formica edging strip down the side edges from top to bottom.

The sides project from the main body to enable a front grille to be fitted neatly. Such a grille may consist of suitable acoustically transparent material stretched over a hardwood frame, push fitted to be flush with the side projections and held in place by Velcro.

The essentials of the construction are rigidity and air-tight joints. The first is ensured by corner and internal braces in the bass chamber and the internal partitions in the middle and upper sections of the enclosures (see Fig.8). Air-tight joints are secured by the use of glue and screws, by accurate fitting, and assisted by a liberal application of car underseal to all internal surfaces, although that is not the main function of this material which is used to "deaden" the timber and reduce coloration from any vibrations.

The natural wool fiber used for damping (substitute materials are not recommended) must be well and truly teased out. The air spaces between the fibers are vital. A comb or an old hacksaw blade wedged into a block of wood is an excellent tool for the teasing-out process. Supply difficulties may make

FIG. 3

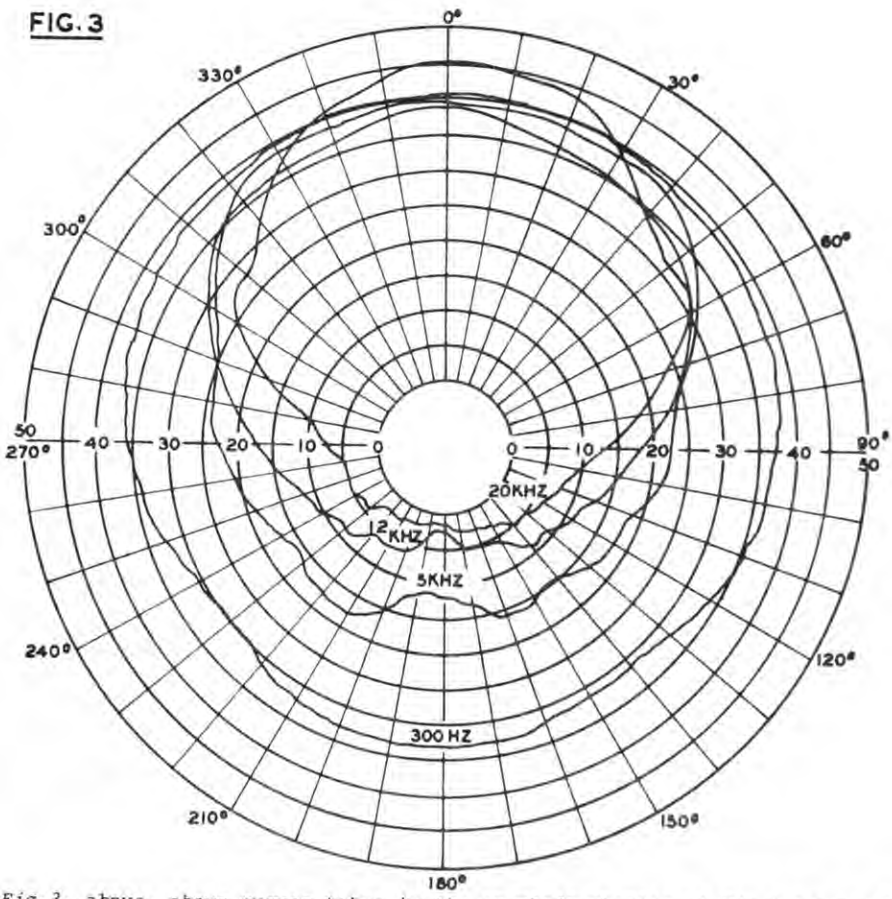

Fig.3, above, shows curves taken in the anechoic chamber at Hirst Research Centre, Wembley.

Fig.5a, below, is T-27's response at 1 meter on axis; 5b is T-27's response 30° off axis. 5c is the system's impedance curve.

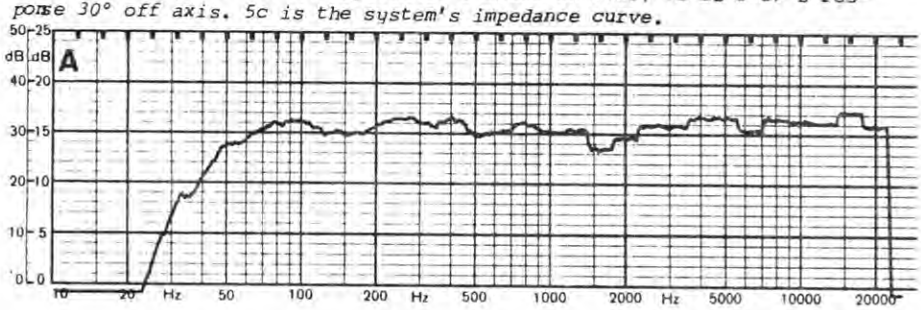

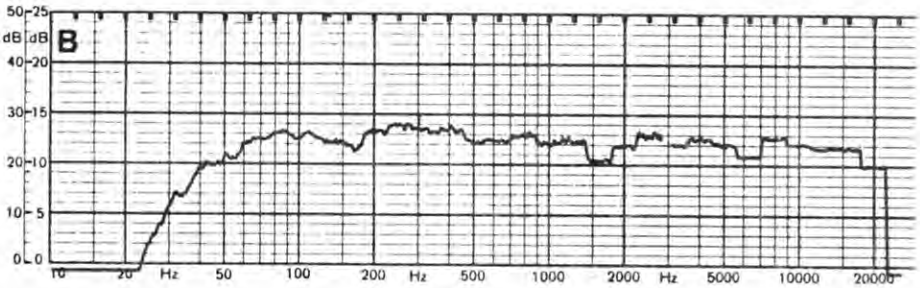

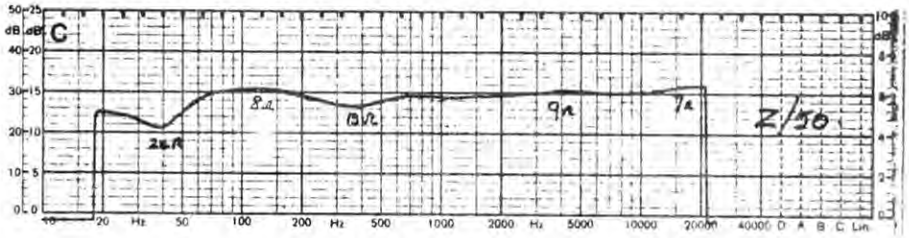

FIG. 11A CORRECTED DRAWING

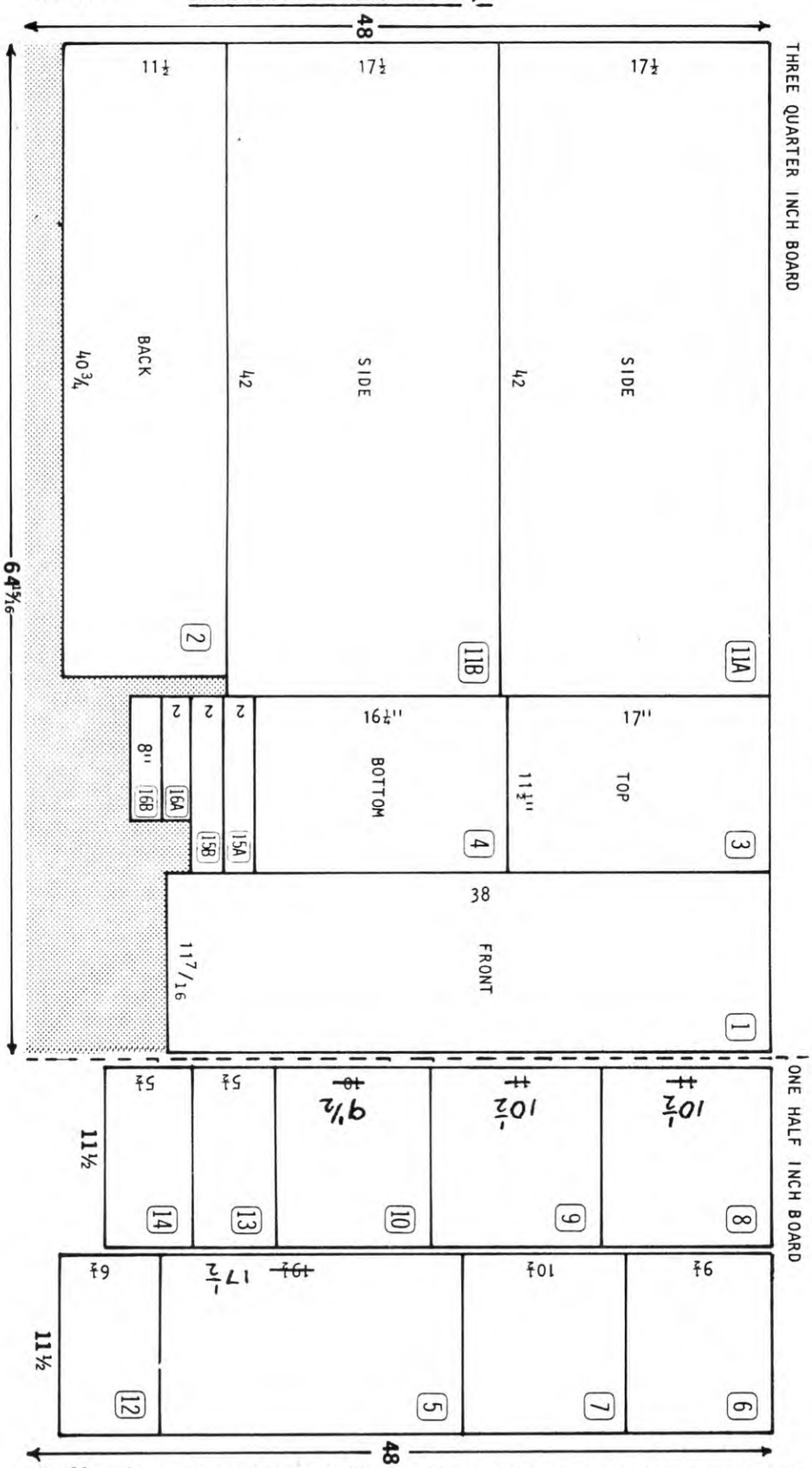

Fig.11a, above, is a cutting guide for the three-quarter inch and half-inch high density particle board to construct one speaker. All measurements are in inches. Fig.11b identifies the numbered pieces, but does not include the sides (11A, 11B). Pieces 15A & B and 16A & B are to be glued together to make the "T" brace shown as 15 and 16 in Fig.11b.

it necessary to use short fiber wool rather than the specified long fiber, but in either case the application is the same.

It should be evenly distributed at a rate of 6 to 8 oz. per cubic foot (2 lbs. per cabinet). Please remember that once the cabinet top is finally fixed in position--or the side, depending on your method of assembly--the rear sections of the line will be inaccessible, so damping material *must* be inserted into these cavities beforehand. It is desirable to use a couple of small pieces of netting across the long rear section of the line which leads directly from the bass chamber, or to use cross stringing attached to staples, but not stretched tight, to prevent impaction of the damping material with the passage of time, or due to movement of the enclosures. In the bass chamber itself the brace and dowels will help in this respect.

The rear of the bass and midrange drivers should also be covered with open mesh net--not pulled tight--to keep the wool out of contact with the rear of the cones.

The KEF units come with diagrams and precise instructions for installation and rebating, and *all* units should be recessed flush with the surface of the front baffle. The B.139 should have a strip of draft excluder foam between frame and board; the other units are supplied complete with gaskets.

Fitting instructions for the Cel-

FIG. 11B

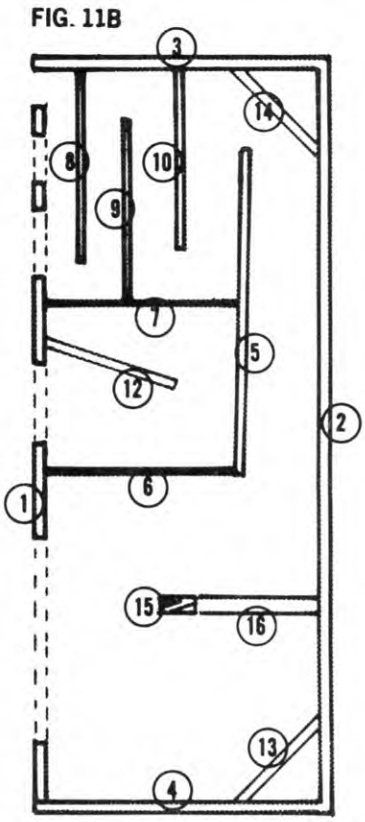

estion 2000 and the STC 4001G are given in Figs.9 and 10. The 2000 is the preferred unit, but the 4001G may be substituted if the former is difficult to obtain. If gaskets are not supplied with these units, elastic sealant strip or draft excluder foam should be used between flange and baffle. The same size of baffle hole will accommodate either unit.

The strips of wood under the cabinet base, forming a shallow plinth, are of course optional. The height of this plinth may be increased to three or four inches, or Shepherd Mini-casters or metal domes substituted, according to the user's preference. The casters may be fitted inside the plinth and concealed by it.

The dividing network on its PCB may conveniently be sited at the rear of the front panel at the top, near the vent. Wires to the input, bass and mid-range units, color coded, are most easily taken through holes in the cross panels up to the position of the dividing network, leaving plenty to spare at either end, because the holes must be sealed with Araldite or similar adhesive, and once this is done it will not be possible to pull more wire through either way. The input leads may terminate through the rear of the bass chamber in any convenient form of input socket or terminal strip, again sealed to the back with adhesive to prevent any air leakage.

Note that the dividing network has been designed round reversible (non-polarized) electrolytic capacitors and ferrite cored inductors, with the exception of the .47mFd capacitor in the super tweeter circuit (in the case of the 4001G only), and the substitution or mixing in of capacitors of other types will alter the Q of the system and vitiate results. The capacitors used should be of the best quality and closest tolerance available. The 6mH bass inductor should be of the high power low resistance type, wound with heavy gauge wire on a core of ½" diameter.

These speakers will comfortably accept the full output on music of an amplifier capable of delivering 50 Watts rms per channel into 8 Ohms, but care should be exercised if test discs are used, because pure tone inputs at frequencies above 5kHz at powers higher than 8 Watts may damage the tweeters.

Etched circuit boards and full sets of components of high quality, correct value and close tolerance may be obtained from Falcon Electronics, Ltd., 26 Station Road, Bexhill-on-Sea, Sussex, England. The preferred long fiber wool is available from the same source.

Some people always feel the need, or the desire, to vary a specified design to suit their individual requirements. Such adaptations can lead to disappointments, and the procedure is not recommended. However, in case anyone should be moved to attempt it, the following points should be noted:

1. The tall slender shape of the cabinet was chosen for two main reasons:
   (a) to enable h.f. response to be radiated at ear level when the listener is seated, and clear of the backs of soft furniture;
   (b) to occupy a minimum of floor space.
2. The cross sectional area of the line should not be reduced.
3. The depth of the cabinet behind the bass driver should not be reduced.
4. The length of the line may be increased, but only by enlarging the cabinet. Reducing the length of the line will affect low frequency quality.
5. Any change in the specified drive units will necessitate a complete re-design of the dividing network, and I regret I am unable to offer assistance in this respect.

Finally, the reflectors at the top and bottom rear of the cabinet, shown in Fig.1, are important and should not be omitted. They may be 2½"/3" square timber, cut diagonally, in which case the sawn surface should be planed smooth, or they may consist of pieces of ½" thick board over a square batten, shown dotted at the bottom of Fig.1.

Some variability has been observed in the mounting system pattern of the Celestion 2000 units. Certain models have had no holes in the flanges, but have been supplied with three fixing clips which are

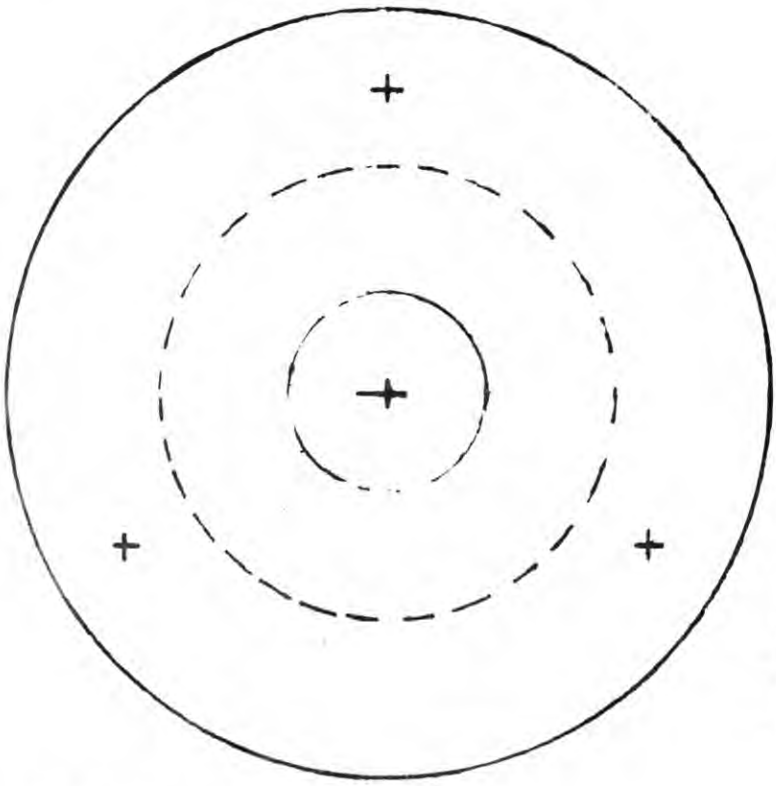

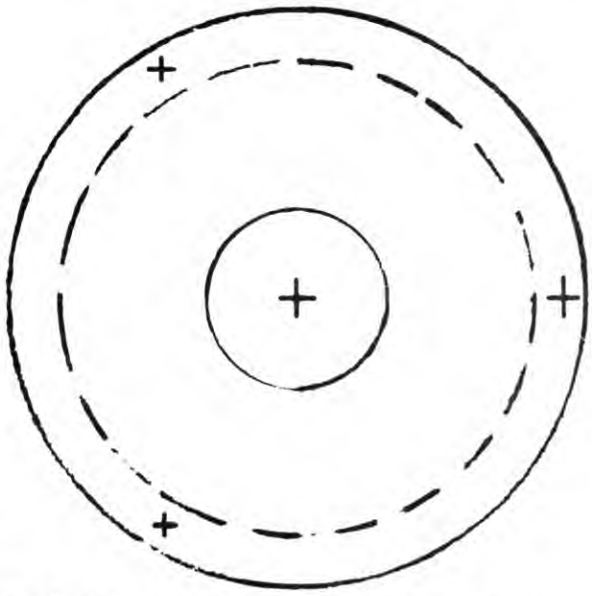

Fig.9. Full size template for Celestion mounting at left, above. Baffle hole 2 3/8", Flange 4", Mounting 3 holes 1 3/8" radius. Recess 1/8"
Fig.10. STC 4001.G mounting template, above. Baffle hole 2 7/16", Flange 3", Mounting 3 holes 1 3/8" radius. Recess 1/16"

applied from the front to hold the unit in place. Others have arrived without either holes or clips. In this latter case, the best course is to remove the gasket (if included) from the rear of the flange, and then very carefully drill three holes through the metal, using the punched holes in the gasket as locators and not forgetting a *light* tap with a sharp center punch before the drill is applied. On some samples, the perforated diaphragm covers have shown a tendency to be loose, or to fall off. Three *small* dabs of impact adhesive on guard and face plate, given fifteen minutes to set under light pressure from an elastic band, will put this right.

The foam "bung" in the mid-range enclosure vent is important. It should not be over-compressed. A piece about 1" longer, ¼" thicker than the slot and 1½" front to back, held in place with rubber cement, is fine. Two pieces may be used if necessary to get the thickness right, joined with rubber cement.

It is a good idea to spray the teased-out damping material thoroughly with moth proofer before insertion into the cabinets.

An air-tight seal between the front baffle and cabinet body, while retaining the facility to remove the baffle board easily in case of necessity, is ensured by the use of standard draft excluder strip all round between baffle and *all* edges with which it makes contact, not forgetting those of the mid-range enclosure.

A last word of caution: it is not unknown for initial reaction to the sound of these speakers to be one of slight disappointment, on the grounds that they make no sensational impact, they are not immediately "impressive" and are somewhat lacking in bass response. Experience of them over a few days usually corrects this feeling. The bass is there all right, and so are the "highs," but in due proportion and balance; they do not overwhelm the listener.

Readers will be aware of the phenomenon known as "listening fatigue" which, at best, affects concentration after half an hour or so and at worst produces an irritation which obliges the listener to switch off. The subject is complex, and the effect cannot be attributed to any single component of the reproducing chain. However, it may be said without fear of contradiction that loudspeakers have something to answer for when they are "bassy" or excessively "brilliant" although such qualities frequently produce temporary, short-term excitement or stimulus. I have made a serious attempt in this design to reduce listening fatigue due to loudspeakers to a minimum, and to enable listening pleasure to continue unabated for as long as the user may wish.

[Although the drivers of your Webb TL loudspeaker are all accessible from the front, sealing the cabinet will make the crossover inaccessible if you mount it inside. Should you wish to alter the crossover later or change to a bi- or tri-amplified system, you may want to either wire a multipole switch to make it possible to feed each speaker individually, or mount the crossover beneath a cabinet supported by slightly taller blocks or casters. Since the midrange is wired out of phase for use with author Webb's passive crossover, you may want to bring out leads for each pair of driver connections (4 pair = 8 terminals) rather than wiring all "Ground (-)" terminals together and bringing them out to one terminal.--Ed.]

BASIC REQUIREMENTS
FOR ONE PAIR OF SPEAKERS

1½ sheets 18mm. high density chipboard
½ sheet 12mm. ditto.
Bracing timber; 5 ft. ½" dowel rod
4 lb. long fiber wool
Woodworking glue--about 1½ liters
Car underseal--approx. 1 liter
1 yard Velcro fastener
Grille foam or fabric; hardwood for frame
Open form for mid-range vent
Rubber cement
Wire for connections: approx. 3 yards each of 6 different colors
Terminal strip or plug and socket
Standard draft excluder strip--foam weatherstrip ½", 20 ft.
Staples and ball of thin string
1 sq.yd. open mesh netting
Moth proofer (aerosol)
Screws
Drive units:
- 2 off KEF B.139 Type SP.1044 8Ω nom. impedance. Bass
- 2 off KEF B.110 Type SP.1003. 8Ω nom. impedance. Mid-range
- 2 off KEF T.27 Type SP.1032. 8Ω nom. impedance. H.F.
- 2 off Celestion HF.2000. 8Ω nom. impedance. H.F.

or

- 2 off STC 4001G. 15Ω nom. impedance. H.F.

Approximate details of finished speakers:

Overall size: varies with plinth and method of construction. Approx. 42" x 13½" x 17½" deep.
Weight: approx. 100 lbs.
Crossover points: 400Hz; 3.5kHz; 10kHz.

The finished Webb TL speaker above with its grille frame in place. Fig. 8, below illustrates baffle mounting methods.

FIG. 8

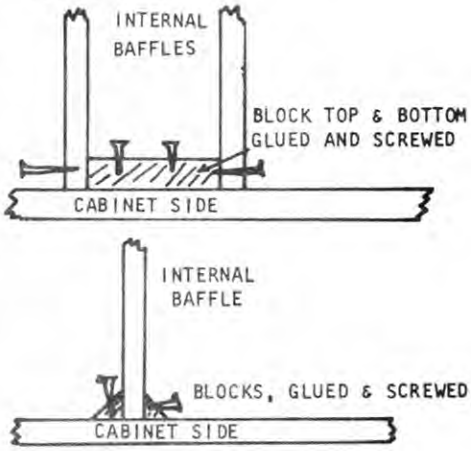

WHERE TO FIND DRIVERS

KEF Electronics (Tovil, Maidstone, Kent ME15 6QP England have just announced they plan to market their kits and drivers in the U.S. Write them for a dealer list. Two suppliers we suggest: Audionics, 10035 NE Sandy Blvd., Portland OR 97220. The Ear Drum, 5146 W. Imperial Hwy. Los Angeles 90045 has KEF B139 @ $60; KEF B110 @ $29.50; KEF T27 @ $23.50 and the Celestion 2000 @ $20. See note on page 5 for sources of crossover components.

TRANSMISSION LINE TROUBLES

THERE IS A SLIGHT discrepancy in the dimensions shown in the front and side views of B. J. Webb's "A Proven Transmission Line Loudspeaker" (Issue 1, 1975, p. 4, Fig. 1). The front view shows the midrange slot (8" x 1½") at 13¾" from the top of the speaker, while the side view shows this same slot at 14¼" from the top. As this dimension affects several other critical ones (midrange chamber size) in the speaker, could you advise me as to the correct intended measurements?

GREGORY SMITH
Ottawa, Ont., Canada

Mr. Webb replies:

BAFFLE BOARD dimensions are correct (Fig. 1, left hand side). On the right hand drawing ("section thru center") the 13" dimension from the underside of the cabinet top should extend to the underside of the dividing partition instead of the top side thereof as shown. The distance to the bottom edge of the mid-range vent will then be 14½" as on the baffle board: 2" (vent) + 3" + 4½" + 3½" + 1½" - 14½" on the baffle board drawing; 13" + 1½" (mid-range vent) on the second drawing.

My apologies for the error and any inconvenience and delay caused.